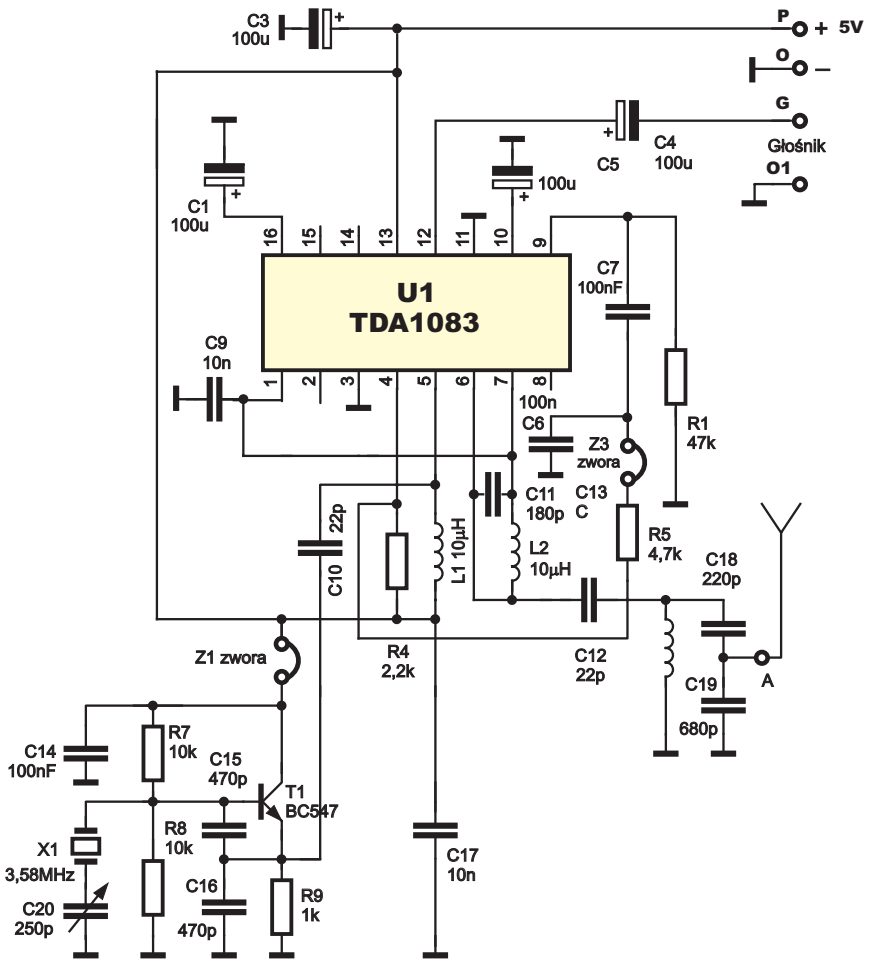
C3
100u
P
+ 5V
O
–
G
Głośnik
O1
C4
100u
C5
100u
C1
100u
U1
TDA1083
C7
100nF
C9
10n
100n
C6
Z3
zwora
R1
47k
C11
180p
C13
C
R5
4,7k
C10
22p
L1 10µH
L2
10µH
C18
220p
Z1 zwora
R4
2,2k
C12
22p
C19
680p
A
C14
100nF
R7
10k
C15
470p
T1
BC547
R8
10k
X1
3,58MHz
C20
250p
C16
470p
R9
1k
C17
10n